Panasonic
BUSINESS

AW-HR140

Full-HD Outdoor Integrated Camera

Compatible with various outdoor environments and applications

Outdoor integrated remote camera that maintains stable recording performance in the toughest of environments

Outdoor housing and camera, lens, and pan head are integrated in this remote camera system.
The camera is equipped with the same Digital Signal Processor (DSP) and 1/2.86 type full HD 3MOS sensors as in the AW-HE130W/K. High sensitivity, high S/N ratio, and high resolution are achieved by advanced video processing.
In addition to the functions of the AW-HE130W/K, mechanisms needed for shooting outdoors are enhanced as well. Flexible operation is achieved by features compatible with tough outdoor environments such as resistance to water and dust, wind pressure, and severe salt damage, as well as hot environments.

1/2.86-type 3MOS sensors for high-level video capture and production.

Equipped with the same 1/2.86-type full HD 3MOS sensors and DSP (Digital Signal Processor) as AW-HE130W/K, AW-HR140 realizes high sensitivity, a high S/N ratio and high resolution through the use of advanced video processing.

High Performance 20x Zoom Lens/1.4x Digital Extender Zoom

In addition to a sharp, fast F1.6, 20x optical zoom lens, the AW-HR140 is equipped with an innovative 1.4x digital extender that can increase the effective focal length of the lens by 40% while delivering smooth, high resolution video.

*Images are simulated

Haze Reduction Function

For installations in places where haze tends to occur, this function performs correction for a subject with low contrast to make the image clearer.
Three settings can be selected for the compensation level.

- White-tinged images are reduced and overall contrast is improved.
- Intensity of haze reduction effect can be adjusted manually according to the density of haze.
- Haze reduction level can be selected from three stages: low, mid, and high.

*Images are simulated

Resistance to wind pressure

All functions are guaranteed to operate in wind speeds of up to 15 m/s. Basic performance is maintained at wind speeds of up to 50 m/s without destruction of the camera.

Resistance to severe salt damage and compatibility with hot environments

Aluminum and other metal parts are coated to protect against severe salt damage, enabling installation in seaside areas subject to salt air. PBT/PPS plastic is employed for the exterior, giving excellent heat resistance.

PBT (Polybutylene Terephthalate): Excellent long-term thermal stability
PPS (Polyphenylene Sulfide): High heat resistance and excellent abrasion resistance

Defroster for temperatures down to -15 °C (5 °F)

Frosting, icing, and condensation are prevented by heating in environments as cold as -15 °C (5 °F). Even in blizzards, snow that hits the glass surface melts off to maintain visibility.

Lens wiper

The lens part is kept clear even when used in harsh environments. The wiper can be controlled by a remote camera controller (AW-RP120G/RP50) if connected to the control terminal of a commercially available washer unit from the camera's washer control terminal.

Industry's first professional camera* with pan/tilt mechanism vibration compensation function; Dynamic Image Stabilizing System (D.I.S.S.)

In addition to stabilization by conventional optical image stabilization (OIS) technology, shaking is also corrected by D.I.S.S. to enable smooth recording outdoors. Such shaking could include that from impacts and vibration due to recording outdoors or being installed under certain conditions and that during pan/tilt rotation operations.

*According to our research, as of April 2017.

Without D.I.S.S. With D.I.S.S.

*Images are simulated

3 Auto Tracking White Balance (ATW) modes (Slow/Normal/Fast)

In addition to the conventional tracking speed (normal), Slow Mode for gently tracking color temperature changes outdoors, and Fast Mode for quick tracking have been added.

Supporting PoE++*for lower installation cost

By connecting to network devices that support the IEEE802.3bt Draft ver.2.0 standard, power can be supplied via LAN cable. Since it is not necessary to install a power supply or even a local AC outlet, installation costs can be significantly reduced.

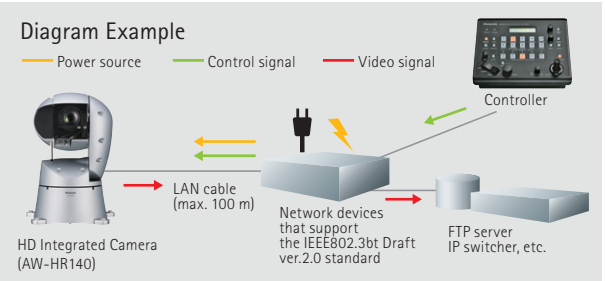

Hubs that support IEEE802.3af/at(PoE/PoE+) are not supported.
* Abbreviation of Power over Ethernet Plus Plus.

Dynamic Range Stretch (DRS) / Hybrid Digital Noise Reduction (Hybrid DNR)

Black defects, halation and washed-out colors are minimized for video images with a visually broad dynamic range (DRS). In addition, with Hybrid Digital Noise Reduction (Hybrid DNR), two types of noise reduction, 2D and 3D, are used together to enable clear video capture under a wide range of lighting conditions, with minimal after-image blurring or image degradation.

Equipped with Night Mode for infrared shooting

The AW-HR140 can deliver high-quality monochrome video in total darkness, when the camera's Night Mode is used in conjunction with an optional IR illuminator.

*Images are simulated

Supports multiple formats for flexible output

In addition to typically supported formats, the camera as well as other cameras designed for indoor-use supports multiple output formats required for specialized applications, including 1080/29.97p, 1080/25p, 1080/23.98p. Remote control video capture can now be more easily performed for specialized applications such as teleproduction, and scientific research.

Supported formats

1080/59.94p, 1080/29.97p*1 , 1080/23.98p*2 , 1080/59.94i, 1080/29.97PsF*3 , 1080/23.98PsF*3 , 720/59.94p, 1080/50p, 1080/25p*1 , 1080/50i, 1080/25PsF*3 , 720/50p

*1: Native output *2: Over 59.94i output *3: For 1080/25PsF, 50i may be displayed on the monitor screen. Furthermore, for 1080/23.98PsF and 29.97PsF, 59.94i may be displayed on the monitor screen.

Monitoring by IP control using PC, Mac and mobile terminals

Using an IP browser, such as Internet Explorer or Safari, it is possible to set up and control the camera from a remote location. This feature simplifies the management of cameras around a campus, or across a worldwide enterprise network. IP video monitoring and remote camera control can also be performed from mobile terminals such as an iPhone, iPad or Android devices.

Mobile terminal screen

Camera control screen (Mac)

Live screen

Multi-screen screen

* For the latest information on supported OS/brower, please refer to the "service and support" on the Panasonic website (http://pro-av.panasonic.net).

Transmit IP video without a separate encoder reduces cost and simplifies installation

There is no need for the separate encoder normally required when streaming video and audio via IP. Thus, systems can be built with exceptional cost/performance benefits.

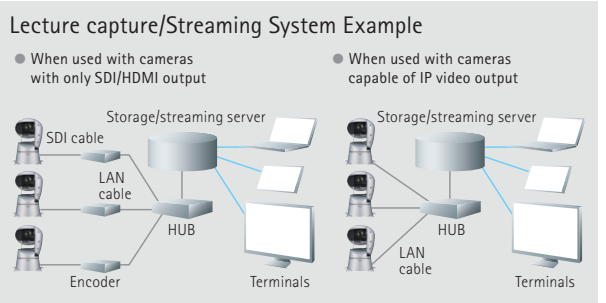

Freeze During Preset function

The Freeze During Preset function can freeze the video during preset playback. The immediate preceding still image is output during preset movements so that the swiveling movement is not displayed, making operations possible with one camera.

With Freeze During Preset function OFF and ON

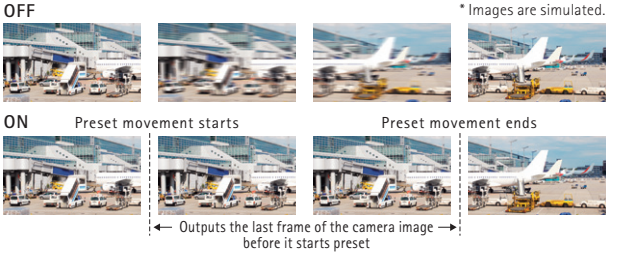

Intelligent Functions

Intelligent functions significantly reduce time and effort for adjustment during remote video acquisition.

Auto Tracking White Balance Function

This function automatically adjusts the white balance as the color temperature gradually changes during outdoor shootings.

Automatic Gain Control (AGC)

Variable gain is automatically controlled in dark scenes

Other Intelligent Functions

• Auto Iris Control • Auto Digital Shutter • Auto ND Filter

Exceptional Pan-Tilt mechanism performance for smooth moves

Thanks to a highly evolved pan-tilt design, the AW-HR140 achieves smoother and more natural movement during on-air shots. The pan-tilt head also has a wide shooting range*, with a pan range of ±175° and a tilt range of -30° to 210° . The newly developed pan-tilt drive provides high-speed operation at maximum 60°/s, excellent response to remote control operation, and highly precise stop control. These features combine to accurately capture fast-action sports scenes or smooth concert footage. The camera also achieves the low noise level during operation, at NC45 or less at a pan-tilt speed of 60°/s.

* Depending on the position of the pan and tilt, its own unit may be reflected in the image.

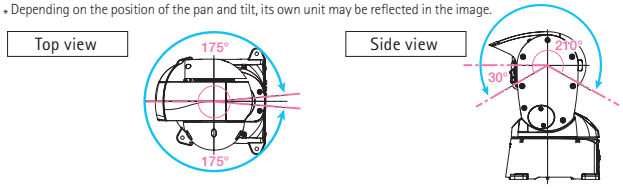

Flexible IP Control Architecture Simplifies System Design and Operation

Up to 100 x AW-HR140 cameras can be controlled via IP from a single AW-RP120G, AW-RP50, or PC. An AW-HR140 can also be simultaneously controlled by up to five AW-RP120G or AW-RP50's via IP.

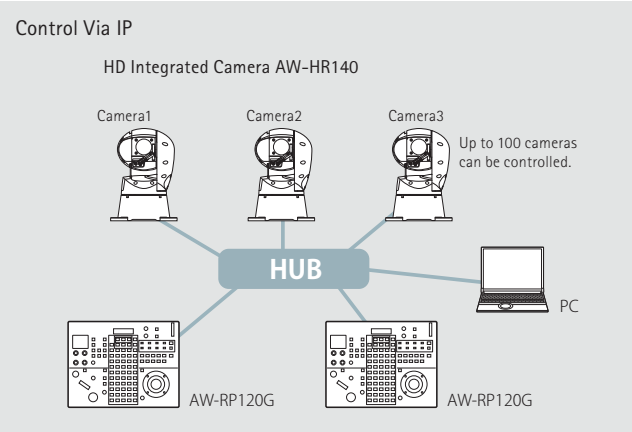

Other functions

- RS422 remote terminal allows up to five units to be controlled via serial control from a controller
- Audio line input function
- Power can be supplied to SDI/Fiber conversion module (DC 12 V outlet)
- Preset memory can hold up to 100 positions

System example

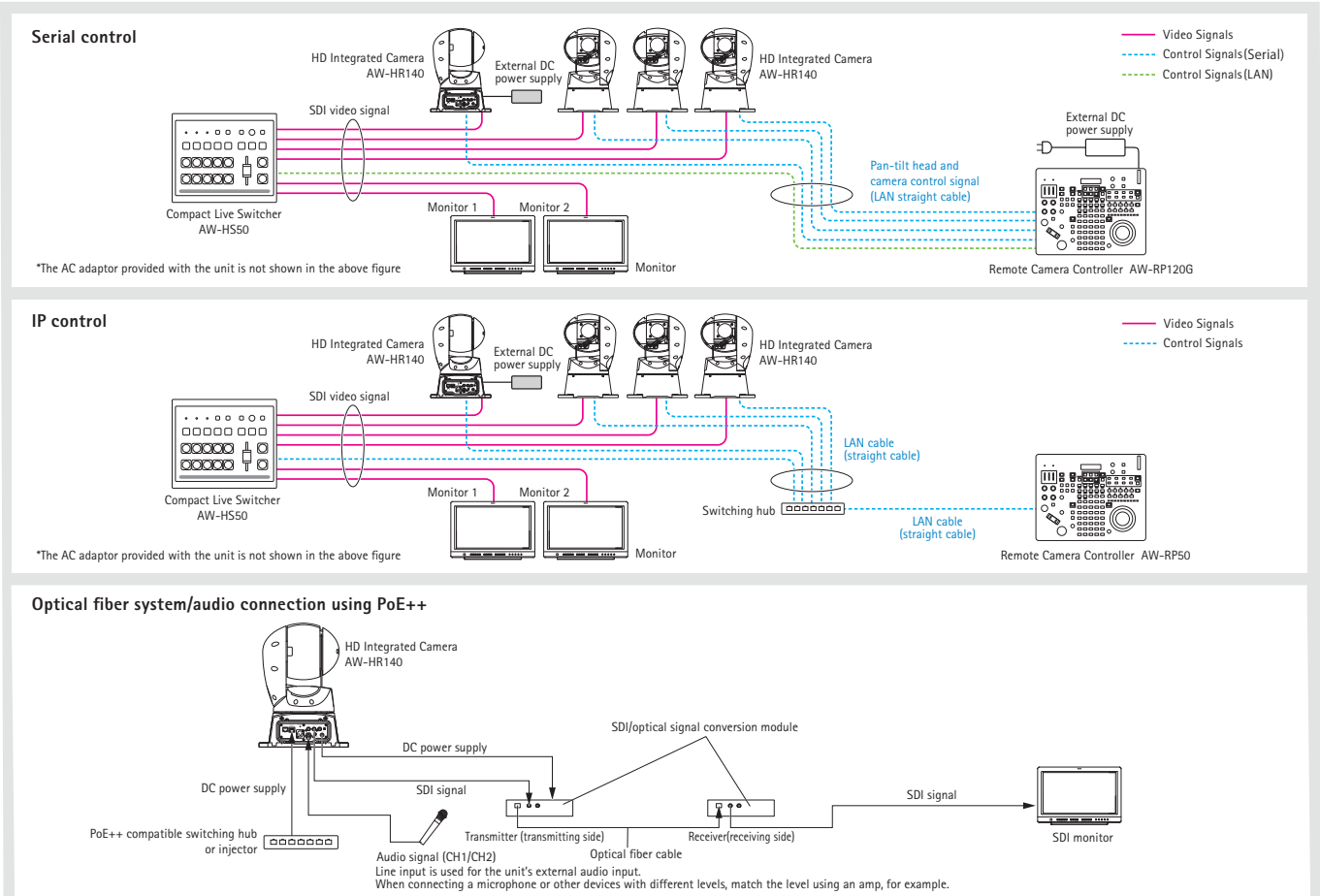

■ Specifications

As of April, 2017

GENERAL		
Power Requirements		DC 12 V to 21.8 V (DC IN connector) DC 42 V to 57 V (PoE++ power supply)
Current Consumption		3.1 A to 5.5 A (DC IN connector) 1.2 A (PoE++ power supply)
Ambient Operating Temperature		–15 °C to 45 °C (5 °F to 113 °F) (preheating is required when –5 °C (23 °F) or less)
Ambient Operating Humidity		10% to 100% (no condensation)
Storage Temperature		–20 °C to 55 °C (–4 °F to 131 °F)
Storage Humidity		10% to 95% (no condensation)
Mass		Approx. 9.0 kg (19.84 lb)
Dimensions (W x H x D)		258 mm x 357 mm x 397 mm (10-5/32 inches x 14-1/16 inches x 15-5/8 inches) (including protrusions and cable cover)
Finish		Silver, salt resistant coating
Waterproof and Dust Proof		IP65 compliant
Maximum Permissible Wind Speed		15 m/sec: Operates normally 50 m/sec: Operation possible 60 m/sec: No damage
Wiper		Installed as standard
Heater		Installed as standard
Defroster		Installed as standard
Controller Supported		AW-RP120G, AW-RP50, AK-HRP200G • It may be necessary to upgrade the version of the controller in order to support the unit. For details on upgrading, visit the support page on the following website. <http://pro-av.panasonic.net/>
Camera Unit		
Imaging Sensors		1/2.86-type Full-HD 3MOS
Lens		Optical 20x zoom/10x digital zoom, F1.6 to F3.4 (f=4.5 mm to 90 mm; 35 mm equivalent: 32.13 mm to 642.5 mm)
Focus		Switching between auto and manual
Focus Distance		Entire zooming range: 800 mm (2.62 ft) Wide end: 400 mm (1.31 ft)
Color Separation Optical System		3MOS
Minimum Illumination		2 lx (50 IRE, F1.6, 36 dB, without accumulation)
Horizontal Resolution		1000 TV lines Typ (Center area)
Gain Selection		Auto, 0 dB to 42 dB (1 dB steps) 37 dB to 42 dB is Super Gain Mode
Frame Mix		0 dB, 6 dB, 12 dB, 18 dB, 24 dB • This cannot be configured when the format is 1080/29.97p, 1080/23.98p, 1080/29.97PsF, 1080/23.98PsF, 1080/25p, or 1080/25PsF. • When [Iris Mode] or [Focus Mode] is set to [Auto], this cannot be set to 18 dB or 24 dB.
Electronic Shutter Speed	59.94p/59.94i	1/100, 1/120, 1/250, 1/500, 1/1000, 1/2000, 1/4000, 1/10000
	29.97p	1/30, 1/60, 1/120, 1/250, 1/500, 1/1000, 1/2000, 1/4000, 1/10000
	23.98p	1/24, 1/60, 1/120, 1/250, 1/500, 1/1000, 1/2000, 1/4000, 1/10000
	50p/50i	1/60, 1/120, 1/250, 1/500, 1/1000, 1/2000, 1/4000, 1/10000
	25p	1/25, 1/60, 1/120, 1/250, 1/500, 1/1000, 1/2000, 1/4000, 1/10000
Synchro Scan	59.94 Hz	60.15 Hz to 642.21 Hz (255 steps)
	50 Hz	50.15 Hz to 535.71 Hz (255 steps)
Gamma		HD, FILMLIKE1, FILMLIKE2, FILMLIKE3 0.30 to 0.75 (Manual setting)
White Balance		AWB A, AWB B, ATW, 3200K, 5600K, VAR (2000K to 15000K)
Chroma Amount Variability		OFF, –99% to 40%
Scene File		Scene1, Scene2, Scene3, Scene4
Intelligent Functions		Auto function for each of accumulation, gain, iris, electronic shutter, ND, and ATW
Output Format		1080/59.94p, 1080/29.97p*1 , 1080/23.98p*2 , 1080/59.94i, 1080/29.97PsF*3 , 1080/23.98PsF*3 , 720/59.94p, 1080/50p, 1080/25p*1 , 1080/50i, 1080/25PsF*3 , 720/50p

Synchronization System		
Synchronization System		Internal/External synchronization (BBS/Tri-level sync)
Line Input <AUDIO IN(1/2)>	Input impedance	High impedance
	Input	• 2 channels, XLR balanced input • Input signal level: +4 dBu/0 dBu/–20 dBu (selectable in menu) • Volume variable range: –40 dB to +12 dB (can be changed in 1 dB steps in the menu)
	Output	• 4 channels, superimposed over SDI output • Embedded audio output level: FS-12 dB: –12 dBFS, FS-18 dB: –18 dBFS, FS-20 dB: –20 dBFS (selectable in menu) • Sampling frequency: 48 kHz (synchronized to video) • Quantization bit rate: 24-bit (LPCM) • Audio compression format (IP): G.726, AAC-LC (High quality)
Input		
Input Connector	12V IN	XLR connector
	G/L IN	BNC connector • BBS (Black Burst Sync), tri-level sync supported • Locking to a subcarrier is not possible with BBS.
	Audio input	mini XLR connector (line input) #1: INPUT1 Common, #2: INPUT1 HOT, #3: INPUT1 COLD, #4: INPUT2 Common, #5: INPUT2 HOT, #6: INPUT2 COLD
Output		
Video Output	HD-SDI OUT	SMPTE424/SMPTE292 standards 75 Ω (BNC x 2) • OSD output is possible from the SDI OUT 1/PM connector but not from the SDI OUT 2 connector.
Input/Output		
Input/Output Connector	LAN	LAN connector for IP control/video output/audio output/ PoE++ power supply PoE++ (IEEE802.3bt Draft ver.2.0 standard)
	RS-422	CONTROL IN RS-422A
	EXT	#1: DC GND, #2: HOT, #3: COLD, #4: 12V-OUT
Pan-tilt Head Unit		
Installation Method		Stand-alone (Desktop) or suspended (Hanging) • To ensure safety, the unit must be secured using the mount bracket supplied.
Camera/Pan-tilt Head Control	IP connecting cable	• When connecting through a PoE++ hub: LAN cable*4 (category 5e or above, straight cable), max. 100 m (328 ft) • When a PoE++ hub is not used: LAN cable*4 (category 5 or above, straight cable) max. 100 m (328 ft)
	AW series connecting cable/ standard protocol connecting cable	LAN cable*4 (category 5 or above, straight cable), max. 1000 m (3280 ft)
Pan/Tilt Operation Speed		Maximum speed 60°/s or higher
Panning Range		±175° • For suspended installations, the positions of the pins that determine the movement range must be changed.
Tilting Range		–30° to 210° • Depending on the pan or tilt position, the camera may be reflected in the image. • For suspended installations, the positions of the pins that determine the movement range must be changed.
Quietness		60°/s (NC45 or less)
Vibration Correction		D.I.S.S. (Dynamic Image Stabilizing System)
Accessories		Hexagonal bolt M8 × 30 mm: 4 M8 washer : 4 Spring washer: 4 Cable cover : 1 Washer nozzle mount bracket: 1 Drop-prevention wire : 1 Drop-prevention wire mounting screw (with hexagonal socket, for unit) M4 × 10 mm : 1

*1: Native output *2: Over 59.94i output *3: For 1080/25PsF, 50i may be displayed on the monitor screen. Furthermore, for 1080/23.98PsF and 29.97PsF, 59.94i may be displayed on the monitor screen. *4 Use of an STP (shielded twisted pair) cable is recommended. • When connecting directly to a controller without an Ethernet hub, use a cross cable.

*Specifications are subject to change without notice.

■ Computer requirements

As of April, 2017

CPU	Intel® Core™ 2 DUO 2.4 GHz or more recommended	
Memory	For Windows	1 GB or more (2 GB or more for 64-bit editions of Microsoft® Windows®10, Microsoft® Windows®8.1, Microsoft® Windows®8, and Microsoft® Windows®7)
	For Mac	2 GB or more
Network function	10BASE-T or 100BASE-TX port × 1	
Image display	Resolution: 1024 × 768 pixels or more	
	Color generation: True Color 24-bit or more	
Supported operating systems and web browsers	For Windows	Microsoft® Windows® 10 Pro 64-bit / 32-bit *1 Windows® Internet Explorer® 11.0*1 *3 Microsoft® Windows® 8.1 Pro 64-bit / 32-bit *1 Windows® Internet Explorer® 11.0*1 *3 Microsoft® Windows® 8 Pro 64-bit / 32-bit *1 Windows® Internet Explorer® 10.0*1 *3 Microsoft® Windows® 7 Professional SP1 64-bit / 32-bit *2 Windows® Internet Explorer® 11.0 / 10.0 / 9.0 / 8.0 *3
	For Mac	OS X 10.11 Safari 9.0 / OS X 10.10 Safari 8.0.4 / OS X 10.9 Safari 7.0.2 / OS X 10.8 Safari 6.1.2
	For iPhone For iPad For iPod touch	iOS Standard web browsers
	For Android	Android OS Standard web browsers
Other	Adobe® Reader® (for viewing the operating instructions available on the website)	

*1 Use the desktop version of Internet Explorer. (Internet Explorer for Modern UI is not supported.) *2 Windows® XP compatibility mode is not supported. *3 The 64-bit version of Internet Explorer® is not supported.

For the latest information on supported OS/brower, please refer to the "service and support" on the Panasonic website (http://pro-av.panasonic.net/en/).

Rear view

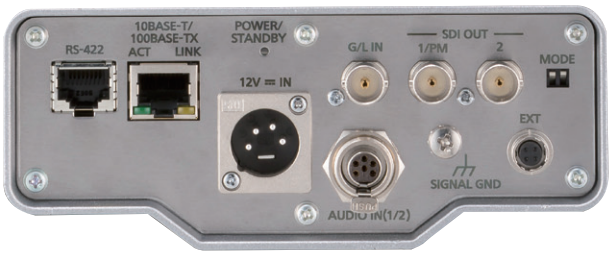

Dimensions

Unit: mm (inch)

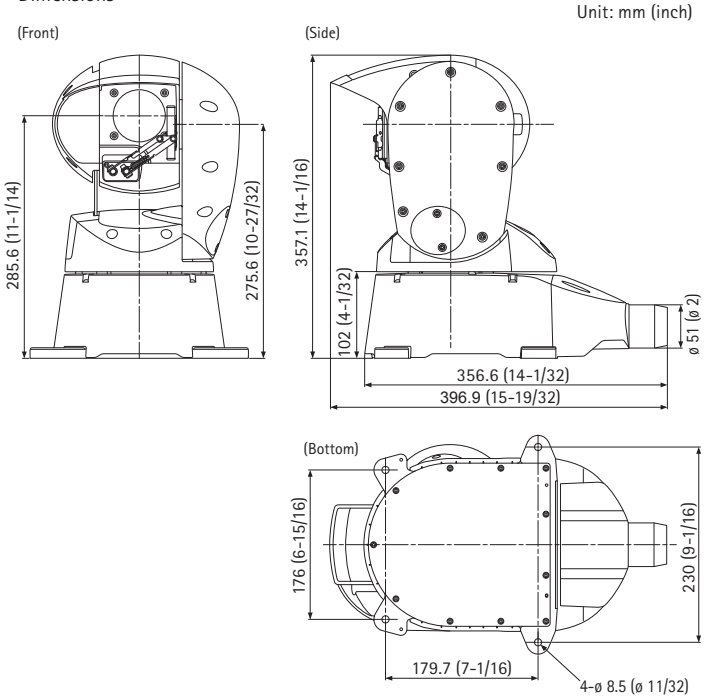

System Camera Option

Remote Camera Controller
AW-RP50

Remote Camera Controller
AW-RP120G
(AC adaptor(DC12 V) is required separately.)

Remote Operation Panel
AK-HRP200G

Compact Live Switcher
AW-HS50

Operation-verified 3rd party devices

[GeoVision]
PoE Adapter
GV-PA901
* Operation-verified on Mar/2017

•GeoVision Inc. (TEL) +886-2-8797-8376 (Email) sales@geovision.com.tw

Panasonic does not guarantee the quality, performance, or the operation of the 3rd party devices.

For more information, please visit Panasonic web site **http://pro-av.panasonic.net/**

* Specifications are subject to change without notice.

Panasonic

Panasonic Corporation
Connected Solutions Company

2-15 Matsuba-cho, Kadoma, Osaka 571-8503 Japan
http://pro-av.panasonic.net/

[Countries and Regions]

Argentina	+54 11 4122 7200
Australia	+61 (0) 2 9491 7400
Brazil	+55 11 3889 4035
Canada	+1 905 624 5010
China	+86 10 6515 8828
Hong Kong	+852 2313 0888
Czech Republic	+421 (0) 903 447 757
Denmark	+45 43 20 08 57
Egypt	+20 2 23938151
Finland, Latvia, Lithuania, Estonia	+358 (9) 521 52 53
France	+33 (0) 1 47 91 64 00
Germany, Austria, Switzerland	+49 (0) 6103 313887
Greece	+30 210 96 92 300
Hungary	+36 (1) 382 60 60
India	+91 1860 425 1860
Indonesia	+65 6277 7284
Iran	
(Vida)	+98 21 2271463
(Panasonic Office)	+98 2188791102
Italy	+39 02 6788 367
Jordan	+962 6 5859801
Kazakhstan	+7 727 298 0891
Korea	+82 2 2106 6641
Kuwait	+96 522431385
Lebanon	+96 11665557
Malaysia	+60 3 7809 7888
Mexico	+52 55 5488 1000
Mongolia	+976 70115577
Netherlands, Belgium	+31 73 640 2729
New Zealand	+64 9 272 0100
Norway	+47 67 91 78 00
Pakistan	+92 21 111 567 111
Palestine	+972 2 2988750
Panama	+507 229 2955
Philippines	+65 6277 7284
Poland	+48 (22) 338 1100
Portugal	+351 21 425 77 04
Romania, Albania, Bulgaria, Macedonia	+40 (0) 729 164 387
Russia & CIS	+7 495 9804206
Saudi Arabia	+966 (1) 4790499
Singapore	+65 6277 7284
Slovak Republic, Croatia, Serbia, Bosnia, Montenegro, Slovenia	+421 (0) 903 447 757
South Africa	+27 11 3131622
Spain	+34 (93) 425 93 00
Sweden	+46 (8) 680 26 41
Taiwan	+886 2 2227 6214
Thailand	+662 731 8888
Turkey	+90 216 578 3700
U.A.E. (for All Middle East)	+971 4 8862142
Ukraine	+380 44 4903437
U.K.	+44(0)1344 70 69 13
U.S.A.	+1 877 803 8492
Vietnam	+65 6277 7284

ISO 14001 JACO EC98J2010 — UKAS MANAGEMENT SYSTEMS 051

Factories of AVC Networks Company have received ISO14001:2004-the Environmental Management System certification. (Except for 3rd party's peripherals.)

SP-HR140PE1

10K201704UP-1 Printed in Japan